PS/2 VGA LCD Console

CL1000 (CL1000M: 17" LCD; CL1000N: 19" LCD)

- The CL1000 is a LCD KVM console that serves as the front-end for standard KVM switches. The CL1000 features an integrated 17" or 19" LED-backlit LCD panel, full keyboard, and touchpad in a 1U, rack-mountable, Slideaway™ housing.

Users who already have a switch can take advantage of the space saving and efficiency benefits of the CL1000 LCD KVM console without the unnecessary expense of having to purchase a KVM switch. This model provides convenient 'at the rack' console access to KVM switches already installed at your site.

Front view

Rear view

CL1000 (17")

CL1000 (19")

Features

- Exclusive LED illumination light - designed by ATEN to illuminate the keyboard and touchpad to allow visibility in low-light conditions
- Integrated KVM console with 17" or 19" LED-backlit LCD monitor – in a sliding housing with top and bottom clearance for smooth operation in a 1U high system rack*
- LCD module rotates up to 115 degrees for a more comfortable viewing angle
- Slideaway™ housing is less than 1U – with top and bottom clearance for smooth operation in a 1U high system rack
- Compatible with most PS/2 KVM Switches
- Internal power supply
- Adjustable depth to fit within a rack
- High video resolution:
  - Supports input video resolutions up to 1920 x 1200 @ 60 Hz; and up to 1280 x 1024 @ 75 Hz with the built-in LCD screen
  - Supports DDC, DDC2, DDC2B
  - DDC emulation of the LCD monitor – Video settings of attached computers are automatically adjusted for optimal output to the LCD monitor
- Keyboard Language support: English (US), English (UK), French, German, German (Swiss), Greek (CL1000N only), Hungarian, Italian, Japanese, Korean, Russian, Spanish, Swedish, and Traditional Chinese
- Improved design – optional single person installation kit

Note:
Custom KVM cables or converters are available for USB support

*Compatible rack mounting kit:
CL1000M: 2X-010G, 2X-011G, 2X-012G
CL1000N: 2X-023G, 2X-024G, 2X-025G

Diagram

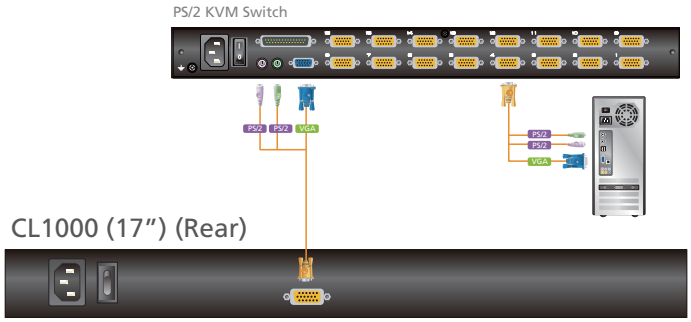

Rack Mount Kit	Depth (cm)
Long (Optional)	68 - 100
Short (Standard)	42 - 72

Easy Installation Rack Mount Kit	Depth (cm)
Long (Optional)	68 - 105
Short (Optional)	42 - 70

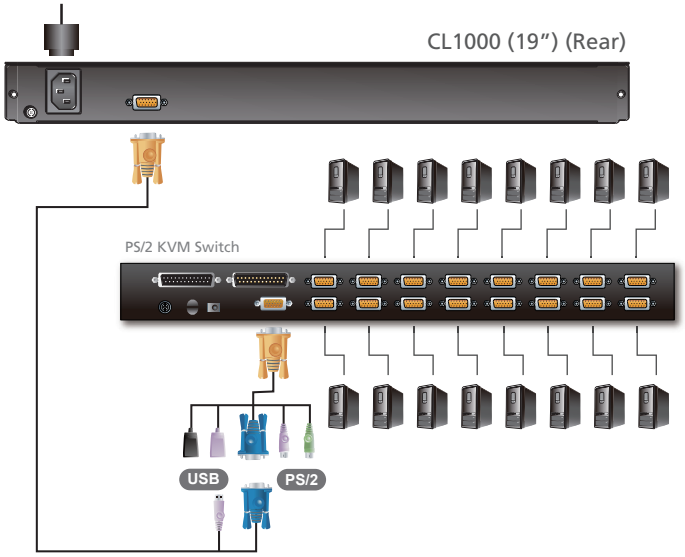

Rack Mount Kit	Depth (cm)
Long (Optional)	70 - 105
Short (Standard)	52 - 85

Easy Installation Rack Mount Kit	Depth (cm)
Long (Optional)	68 - 105
Short (Optional)	57 - 70

產品規格

Function	CL1000M	CL1000N
Connectors		
KVM (Computer) Ports	1 x SPHD Female (Yellow)	1 x SPHD Female (Yellow)
Power	1 x 3-prong AC Socket	1 x 3-prong AC Socket
Switches		
LCD Adjustment	4 x Pushbuttons	4 x Pushbuttons
Reset	1 x Semi-recessed Pushbutton	1 x Semi-recessed Pushbutton
Power	1 x Rocker	N/A
LEDs		
Power	1 (Green)	1 (Green)
Num Lock	1 (Green)	1 (Green)
Caps Lock	1 (Green)	1 (Green)
Scroll Lock	1 (Green)	1 (Green)
Video		
Input Video Resolution	1920 x 1200 @ 60Hz; DDC2B	1920 x 1200 @ 60Hz; DDC2B
Panel Spec		
LCD Module	17" TFT-LCD	19" TFT-LCD
Pixel Pitch	0.264 mm x 0.264 mm	0.294 mm x 0.294 mm
Support Color	16.7M colors	16.7M colors
Contrast Ratio	1000 : 1	1000 : 1
Luminance	250 cd/m²	250 cd/m²
Response time	5 ms	5 ms
Viewing Angle	170° (H), 160° (V)	170° (H), 160° (V)
Resolution	1280 x 1024 @ 75 Hz	1280 x 1024 @ 75 Hz
Emulation		
Keyboard / Mouse	PS/2	PS/2
Maximum Input Power Rating	100-240 VAC; 50-60 Hz; 1A	100-240 VAC; 50-60 Hz; 1A
Consumption	110V / 14.2W ; 220V / 15.5W	110V / 14.2W ; 220V / 15.5W
Environmental		
Operating Temperature	0˚ to 50˚ C	0˚ to 50˚ C
Storage Temperature	-20˚ to 60˚ C	-20˚ to 60˚ C
Humidity	0 - 80% RH, Non-condensing	0 - 80% RH, Non-condensing
Physical Properties		
Housing	Metal+Plastic	Metal+Plastic
Weight	12.02 kg	11.06 kg
Dimensions (L x W x H)	48.00 x 53.83 x 4.40 cm	48.30 x 58.52 x 4.40 cm

Product information is subject to change without prior notice.

ATEN International Co., Ltd.
3F., No.125, Sec. 2, Datong Rd., Sijhih District., New Taipei City 221, Taiwan
Phone: 886-2-8692-6789 Fax: 886-2-8692-6767
www.aten.com E-mail: marketing@aten.com

Publish Date: 03/2018 V8.0

© Copyright 2018 ATEN® International Co., Ltd.
ATEN and the ATEN logo are trademarks of ATEN International Co., Ltd.
All rights reserved. All other trademarks are the property of their respective owners.