4-Port USB DVI Multi-View KVMP™ Switch

CM1164A

ATEN CM1164A 4-Port USB DVI Multi-View KVMP™ Switch improves the operational efficiency of intensive monitoring applications. With limited screen, CM1164A allows users to manage the data more efficiently, up to 16 video sources can be selected, switched and displayed at the same time with independent keyboard, mouse control. The CM1164A provides users a real-time monitoring functionality by combining a 4-port DVI-D switch with a 2-port USB hub and providing the following display modes: Quad View, Picture in Picture (PiP), Picture by Picture (PbP), Picture on Picture (PoP), and Full Screen mode.

Featuring Boundless Switching, the CM1164A allows users to simply move the mouse cursor across windows to switch to other video sources. This makes it easier to instantly access and control the target computer.

Incorporating Daisy Chain Control (DCC) capability, users are allowed to control up to 3 additional CM1164A units via a single console. In addition, CM1164A can be cascaded up to 2 levels to reach the maximum of 16 video sources simultaneously displayed on a display.

Engineered to meet the ever-increasing demand for multi-view functionality, the CM1164A is specifically designed for where real-time monitoring is needed such as aviation industry, financial trading, and medical application.

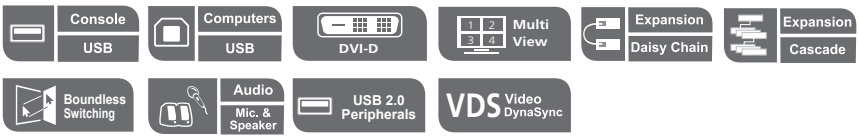

Front view

Rear view

Features

- Multi-view console controls up to four video sources on one screen with display modes including Quad View, Picture in Picture (PiP), Picture by Picture (PbP), and Picture on Picture (PoP)
- System configuration via front panel, OSD, IR Remote – display mode and port selection
- Supports superior video quality – up to 1920 x 1200; YCbCr 4:2:2
- Easily resize and / or reposition any PiP or PbP to suit users' viewing needs
- DCC (Daisy Chain Control) – controls up to 3 additional CM1164A units from a single console
- Cascade up to 2 levels – controls up to 16 computers (with up to 4 x 4 Multi-view mode)
- Computer selection via front panel pushbutton and hotkey, mouse, and the serial commands[1]
- Boundless Switching – simply move the mouse cursor across windows to switch to other video sources even among the daisy chained installation
- Boundless Switching Focus – a window frame to indicate which computer that it currently has the focus
- Supports Extended Desktops Boundless Switching[2]
- Video DynaSync™ – exclusive ATEN technology eliminates boot-up display problems and optimizes the resolution when switching among different sources
- HDCP 1.4 compliant
- Supports RS-232 commands
- Drop down menu – to edit display windows and other functions with the mouse and on-screen control panel
- Console mouse port emulation / bypass feature that supports most mouse drivers and multifunction mice
- Console keyboard emulation / bypass feature that support most multimedia keyboards
- Independent switching for USB peripheral port, audio function and KVM switch focus
- Auto Scan feature
- Power on detection
- Multilingual keyboard mapping – supports English, French, Japanese, and German keyboards
- Full bass response provides a rich experience for 2.1 channel audio
- Supports keyboard combinations via emulation (for Sun / Mac)[3]

Note:

1. Mouse port switching is only workable under the mouse emulation mode and applicable to 3-key USB wheel mouse only.
2. This function is only supported by Multi-View KVMP™ Switch using firmware version v2.3.222 or later.
3. PC keyboard combinations emulate Mac keyboard. Mac keyboards only work with their computers.

Highlights

Flexible Display Modes	CM1164A supports Quad View, Picture in Picture (PiP), Picture by Picture (PbP), Picture on Picture (PoP), and Full Screen mode. User can change size and location of each video source and easily click on demand to control PC.
Boundless Switching	Boundless Switching is a patented ATEN technology. By moving the mouse cursor across different windows, users are allowed to switch KVM focus among multiple sources on multiple windows. The mouse cursor can be moved to another window in any direction and instantly access the target computer.
Expandability	Supports Daisy Chain Control (DCC) for user to control up to 3 additional CM1164A units from a single console. Also, CM1164A can be cascaded up to 2 levels to control up to 16 computers.
Video DynaSync™	ATEN's exclusive Video DynaSync™ technology automatically detects the horizontal and vertical offset values of each computer's display settings and synchronizes them with the monitor users are working on, ensuring that the display resolution will always be correct when switching among different video sources.

Display Mode

Full Screen Mode

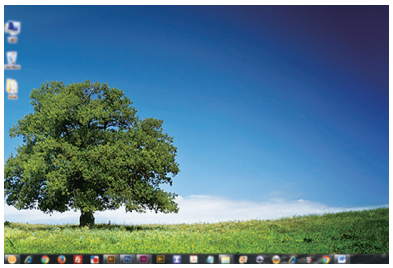

Quad View

Picture by Picture (PbP)

- PbP2

- PbP3

Picture in Picture (PiP)

- Dual

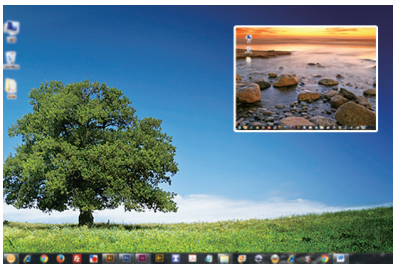

- Quad

- Triple

Picture on Picture (PoP)

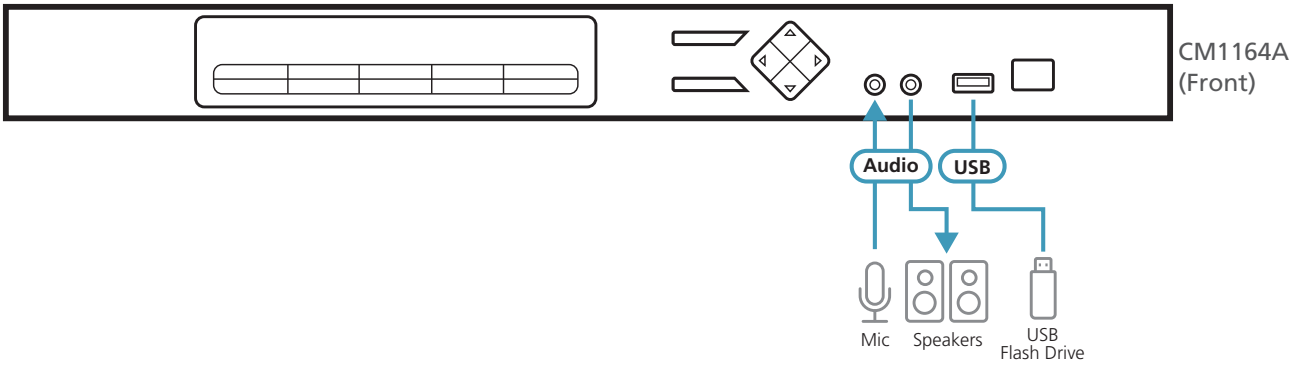
CM1164A
(Front)
Audio
USB
Mic
Speakers
USB
Flash Drive

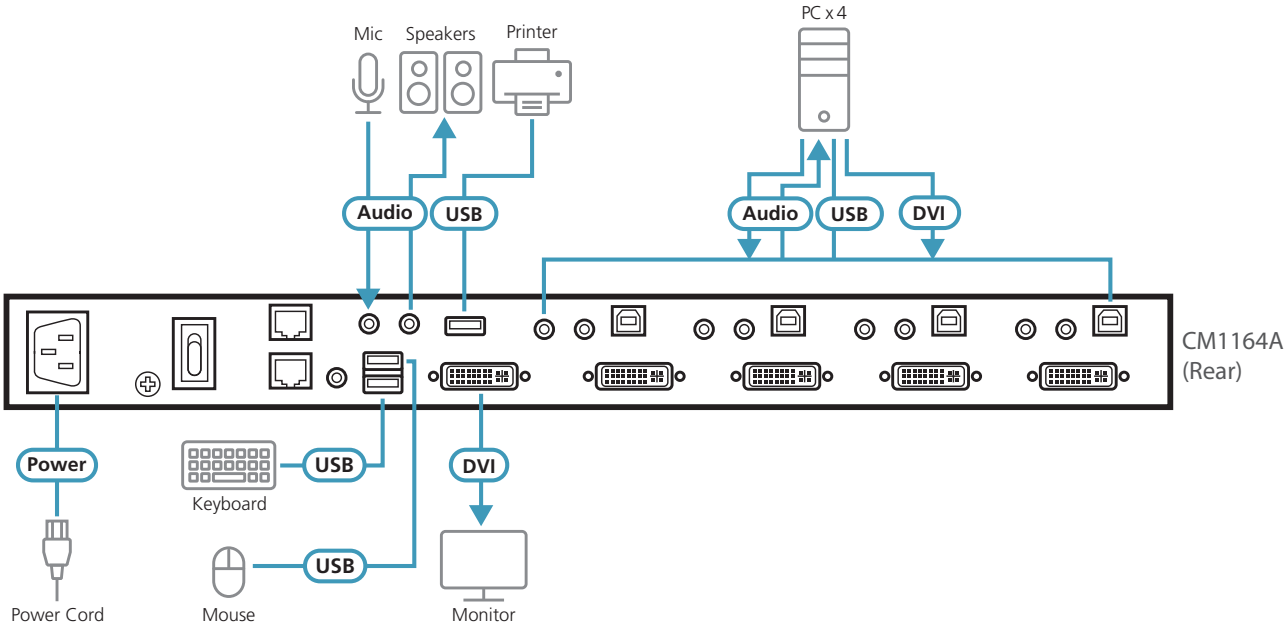
Mic
Speakers
Printer
PC x 4
Audio
USB
Audio
USB
DVI
CM1164A
(Rear)
Power
USB
DVI
Keyboard
USB
Power Cord
Mouse
Monitor

Specifications

	CM1164A
Computer Connections	4
Port Selection	Pushbuttons, Hotkeys, IR Remote Control, On-Screen Display (OSD), Mouse Wheel, Mouse Cursor, RS-232 Commands
Connectors	
Console Ports	2 x USB Type-A Female 1 x Single Link DVI-D Female (White) 2 x 3.5 mm Audio Jack Female (Green; 1 x front panel,1 x rear panel) 2 x 3.5 mm Audio Jack Female (Pink; 1 x front, 1 x rear) 2 x RJ-45
KVM Ports	4 x USB Type-B Female 4 x Single Link DVI-D Female (White) 4 x 3.5 mm Audio Jack Female (Green) 4 x 3.5 mm Audio Jack Female (Pink)
Power	1 x IEC320 Jack
USB Hub	2 x USB 2.0 Type-A Female
Emulation	
Keyboard / Mouse	USB
Switches	
Selected	11 x Pushbuttons
Video	1920 x 1200 @ 60 Hz (DVI-D)
LEDs	
KVM	4 (Orange)
Audio	4 (Green)
USB	4 (Green)
Scan Interval	5, 10, 15, 30, 60, 90 seconds (default: 5 seconds)
Power Consumption	AC 110 V: 9.7 W; AC 220 V: 9.5 W
Environmental	
Operating Temperature	0 – 40 °C
Storage Temperature	-10 – 60 °C
Humidity	0 – 80% RH, Non-condensing
Physical Properties	
Housing	Metal
Weight	2.46 kg
Dimensions (L x W x H)	43.72 x 16.40 x 4.40 cm

ATEN International Co., Ltd.
3F., No.125, Sec. 2, Datung Rd., Sijhih District., New Taipei City 221, Taiwan
Phone: 886-2-8692-6789 Fax: 886-2-8692-6767
www.aten.com E-mail: marketing@aten.com

Product information is subject to change without prior notice.

Released: 06/2022 V6.0

© Copyright 2022 ATEN® International Co. Ltd.
ATEN and the ATEN logo are registered trademarks of ATEN International Co., Ltd.
All rights reserved. All other trademarks are the property of their respective owners.
The terms HDMI, HDMI High-Definition Multimedia Interface, and the HDMI Logo are trademarks or registered trademarks of HDMI Licensing Administrator, Inc.